HYDRO Connect

SPARE PARTS PRICELIST 2026/2027

EFFICIENT. SUSTAINABLE. DEPENDABLE

www.nelsonirrigation.com.au

NELSON AUSTRALIA

INNOVATION IN IRRIGATION

TABLE OF CONTENTS

SIMPLE BOOM
Simple boom: Aluminium 10′ 3

ALUMI BOOM WITH BRACE
ALUMI Boom With Brace: Aluminium 15′ 4

RIGID HOSE DROP
Rigid Hose Drop: 7′ 5

HOSE BOOM WITH BRACE
Hose Boom: 15′ 6

DOUBLE HOSE BOOM
Double Hose Boom: 30′ 7

50Hz END GUN BOOSTER PUMP
Spare Part Kits 8-13

SIMPLE BOOM: ALUMINIUM 10’

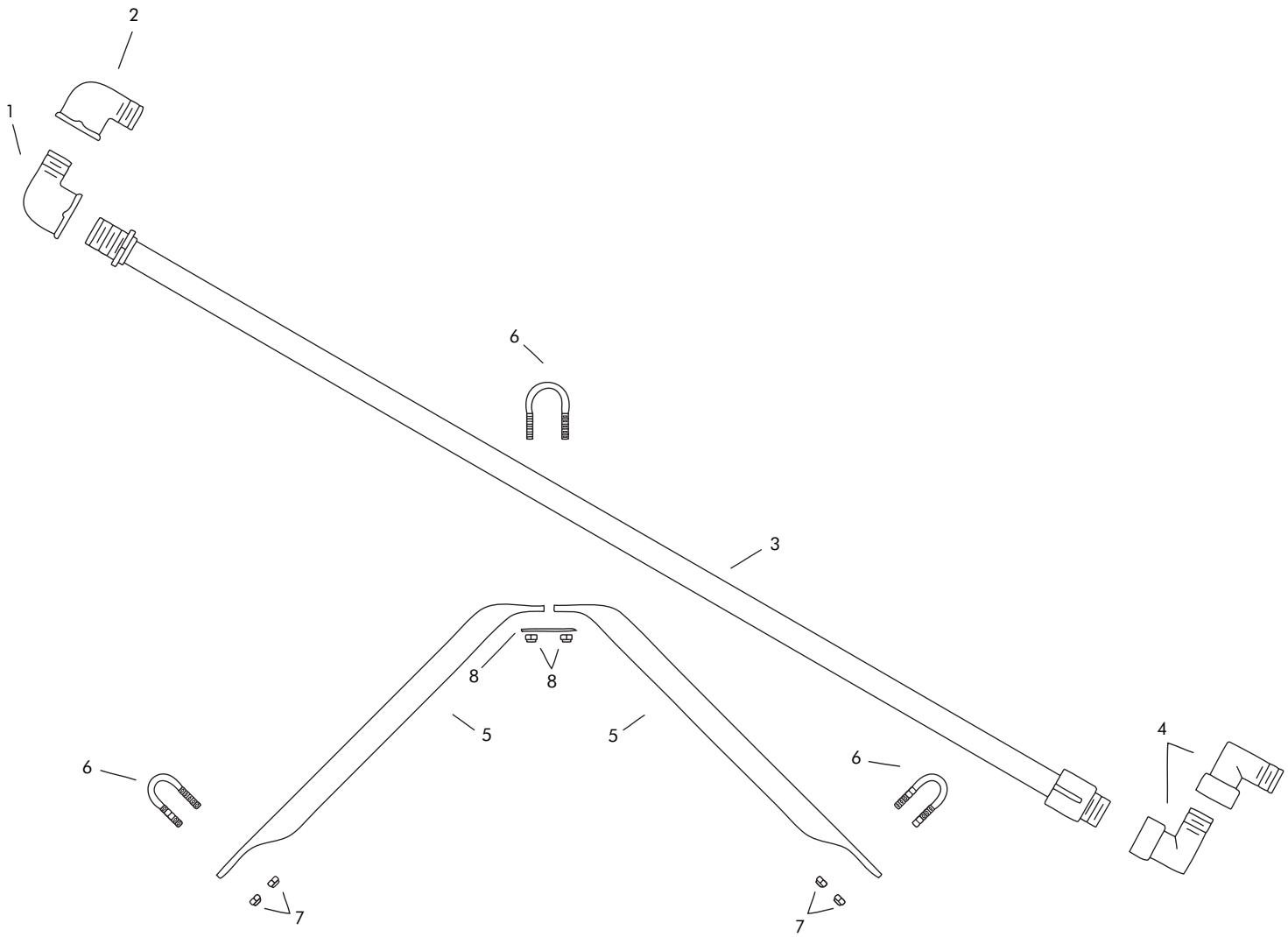

Item	Description	Code	Qty
1	Galvanized Street Elbow ¾” x 1”	MFT-STG-175	1
2	Galvanized Street Elbow ¾” x ¾”	MST-SBB-160	1
3	Aluminium Ex-Drop 1”m x ¾”m x 120”	RAL-115-120	1
4	Marlex Street Elbow ¾” x ¾”	MST-IOB-180	2
5	Truss Rod Brace 60” Span	MST-IAB-060	2
	Truss Rod Brace 84” Tower	MST-IAB-084	2
6	U-Bolt	MST-IOB-800	3
7	¼” Ny-Locks	MST-IOB-160	6
8	U-Bolt Plate	MST-IOB-550	1

ALUMI BOOM WITH BRACE: ALUMINIUM 15’

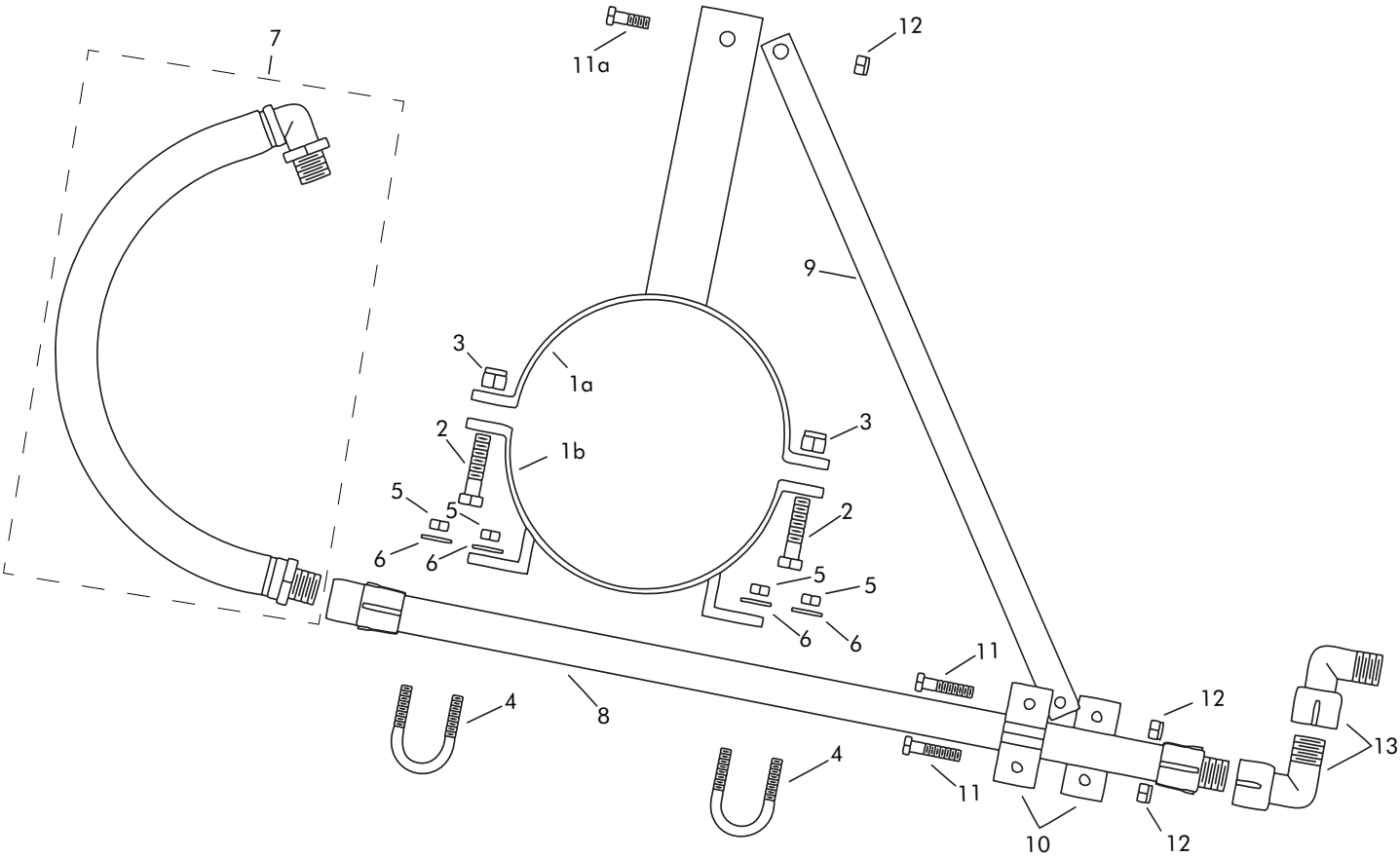

Item	Description	Code	Qty
1	Bracket		
	Bracket only 4"	MST-IOB-213	1
	Bracket only 5"	MST-IOB-212	1
	Bracket only 6"	MST-IOB-216	1
	Bracket only 6 5/8”	MST-IOB-217	1
	Bracket only 8"	MST-IOB-218	1
	Bracket only 8 5/8"	MST-IOB-219	1
	Bracket only 10"	MST-IOB-210	1
2	Bolt 1 ½” x 3/8” - 6 ⅝” and smaller brackets	MST-IOB-130	2
2	Bolt 2” x 3/8” - 8” and larger brackets	MST-IOB-135	2
3	Nylon Locknut 3/8”	MST-IOB-140	2
4	U-bolt #04	MST-IOB-100	2

Item	Description	Code	Qty
5	Nylon Lock Nut 1/4”	MST-IOB-160	7
6	Washer	MST-IOB-120	4
7	Hose Kit	MST-IOB-400	1
	Oiteker clamp - 301	MST-IOB-191	2
	Hose barb 90°	MST-IOB-193	1
	Hose barb - straight	MST-IOB-194	1
	Hose 3/4” x 24”	MST-IOB-192	1
8	Boom A-Ex Drop 15’	RAL-152-180	1
9	Boom Brace 72”	MST-IOB-072	1
10	Boom Brace Clamp	MST-IOB-170	2
11	Bolt 1 ½” x 1/4”	MST-IOB-150	3
12	Marlex Street Elbow	MST-IOB-180	2

RIGID HOSE DROP

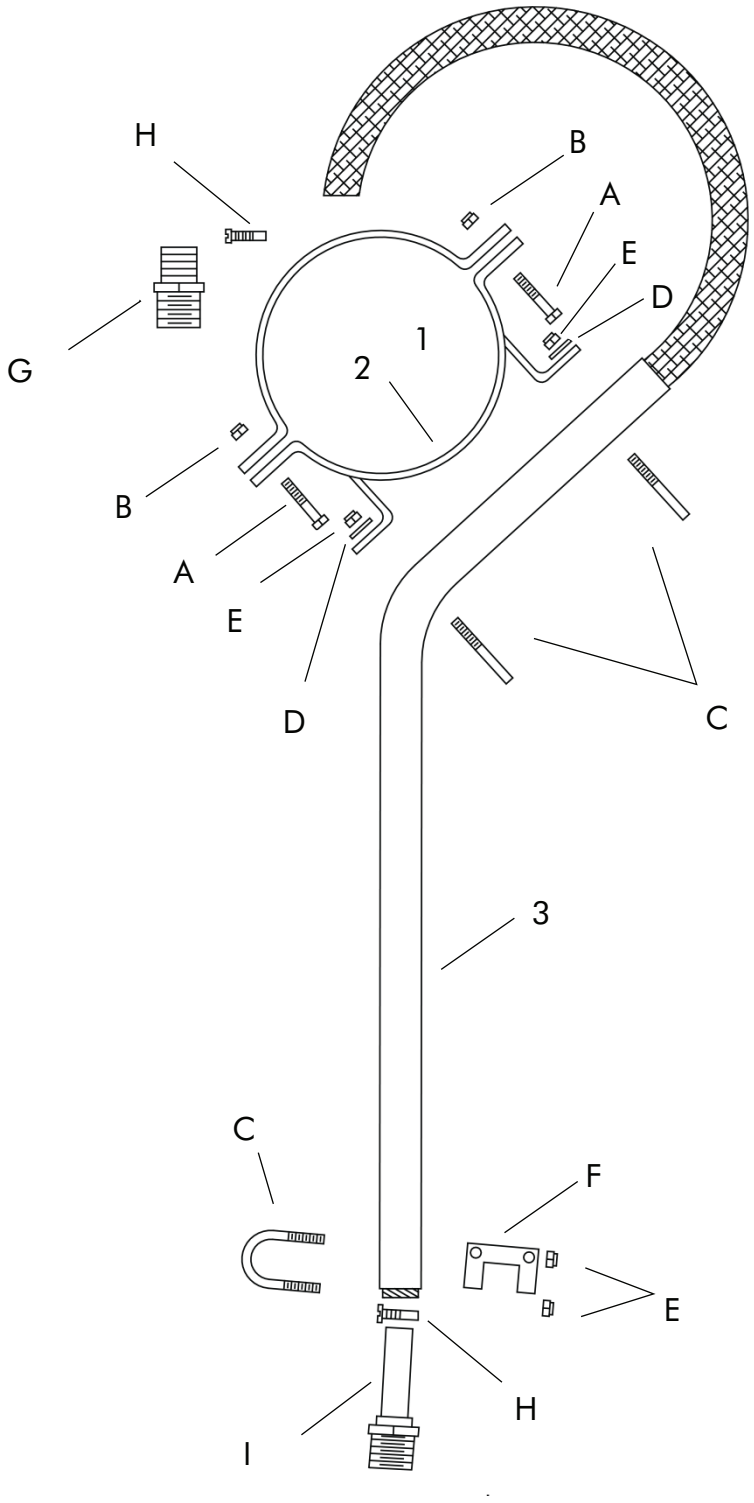

Item	Description	Code	Qty
1	Bracket Top		
	Bracket only 5"	MST-HFB-112	1
	Bracket only 6"	MST-HFB-116	1
	Bracket only 6 5/8"	MST-HFB-117	1
	Bracket only 8"	MST-HFB-118	1
	Bracket only 8 5/8"	MST-HFB-119	1
2	Bracket Bottom		
	Bracket only 5"	MST-IOB-122	1
	Bracket only 6"	MST-IOB-126	1
	Bracket only 6 5/8"	MST-IOB-127	1
	Bracket only 8"	MST-IOB-128	1
	Bracket only 8 5/8"	MST-IOB-129	1
3	Drop Tube		
	Drop Tube 84"	MST-RHD-084	1
	Drop Tube 120"	MST-RHD-120	1
4	Parts Kit 5", 6" 6 5/8"	MST-HFB-KIT	1
	A. Bolt 1 1/2" x 3/8"	MST-IOB-130	2
	B. Nylon Locknut 3/8"	MST-IOB-140	2
	C. U-bolt #05	MST-IOB-500	3
	D. Washer	MST-IOB-120	4
	E. Nylon Locknut 1/4"	MST-IOB-160	6
	F. Torque Clip	MST-HBR-900	1
	G. Hose Barb x Male	MST-IOB-194	1
	H. Screw Clamp	MST-IOB-198	2
	I. Side Force Control Fitting	MST-HBR-800	1
4	Parts Kit 8" & 8 5/8"	MST-HFB-KI2	1
	A. A2" x 3/8"	MST-HFB-KI2	2
	B. Nylon Locknut 3/8"	MST-IOB-140	2
	C. U-bolt #05	MST-IOB-500	3
	D. Washer	MST-IOB-120	4
	E. Nylon Locknut 1/4"	MST-IOB-160	6
	F. Torque Clip	MST-HBR-900	1
	G. Hose Barb x Male	MST-IOB-194	1
	H. Screw Clamp	MST-IOB-198	2
	I. Side Force Control Fitting	MST-HBR-800	1

HOSE BOOM: 15'

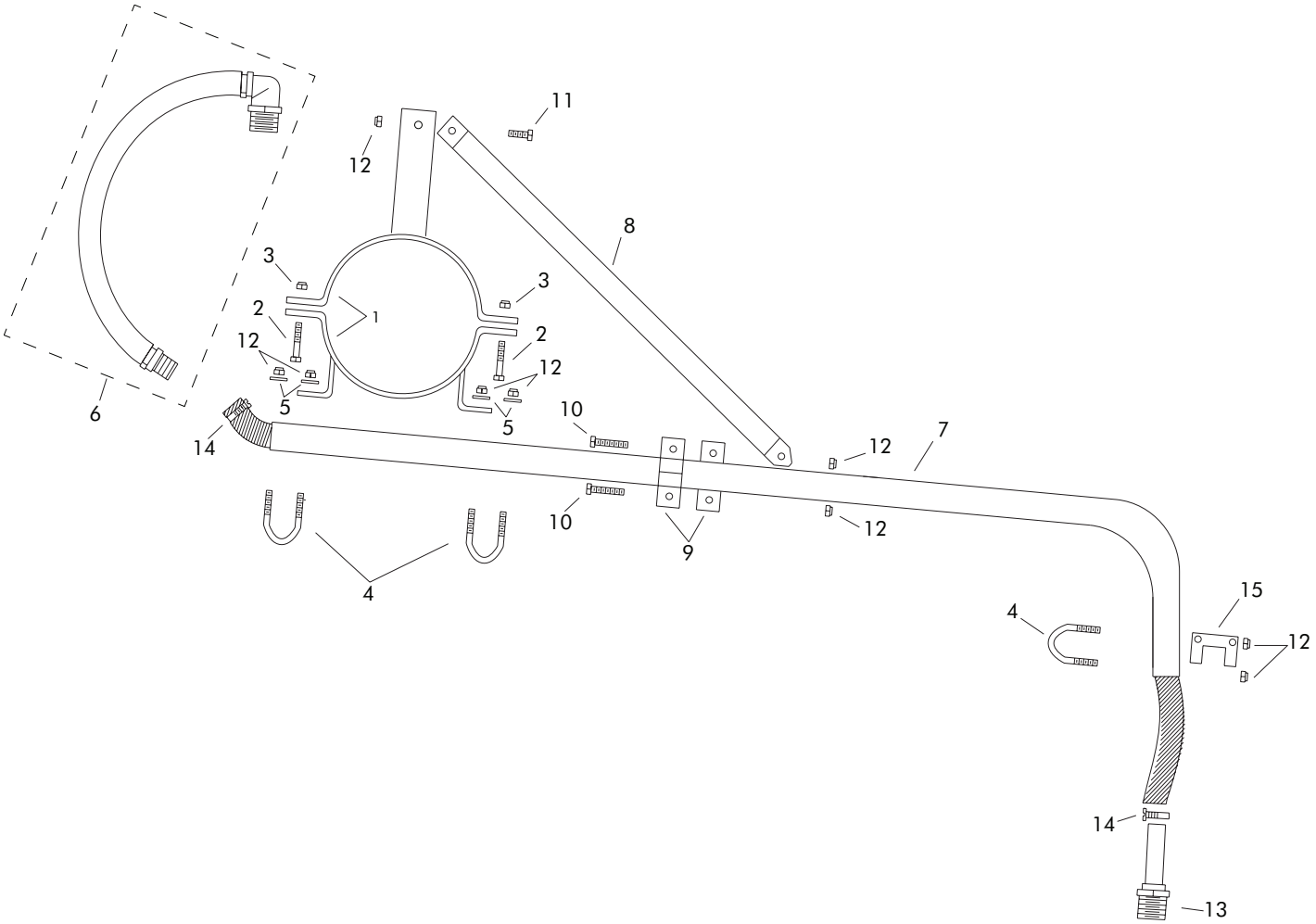

Item	Description	Code	Qty
1	Bracket		
	Bracket only 4"	MST-IOB-213	1
	Bracket only 5"	MST-IOB-212	1
	Bracket only 6"	MST-IOB-216	1
	Bracket only 6 ⅝"	MST-IOB-217	1
	Bracket only 8"	MST-IOB-218	1
	Bracket only 8 ⅝"	MST-IOB-219	1
	Bracket only 10"	MST-IOB-210	1
2	Bolt 1 ½" x 3/8" - 6 ⅝" and smaller brackets	MST-IOB-130	2
2	Bolt 2" x 3/8" - 8" and larger brackets	MST-IOB-135	2
3	Nylon Locknut 3/8"	MST-IOB-140	2
4	U-bolt	MST-IOB-100	3
5	Washer	MST-IOB-120	4

Item	Description	Code	Qty
6	Hose Kit	MST-HBR-400	1
	Oiteker clamp 301	MST-IOB-191	2
	Hose barb 90°	MST-IOB-193	1
	Hose barb - straight	MST-IOB-195	1
	Hose 3/4" x 24"	MST-IOB-192	1
7	Boom 15' Opt C	MST-HBR-180	1
8	Boom Brace 79"	MST-IOB-079	1
9	Boom Brace Clamp	MST-IOB-170	2
10	Tap Bolt 1 ½" x 1/4"	MST-IOB-150	2
11	Bolt ¾" x ¼"	MST-IOB-151	1
12	Nylon Lock Nut 1/4"	MST-IOB-160	9
13	Side Force Control Fitting	MST-IOB-194	1
14	Screw Clamp	MST-IOB-198	2
15	Torque Clip	MST-HBR-900	1

DOUBLE HOSE BOOM

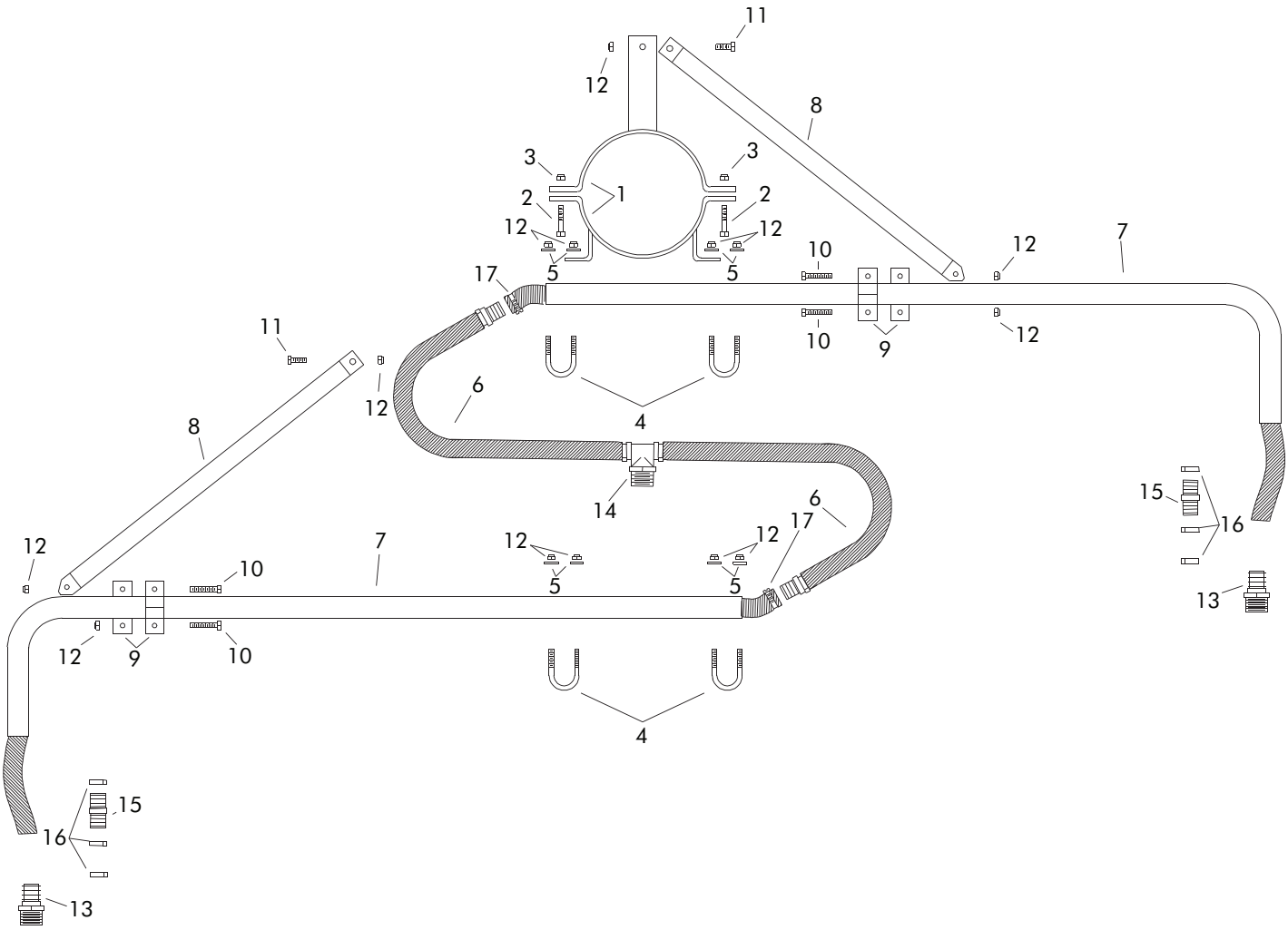

Item	Description	Code	Qty
1	Bracket only	MST-IOB-217	2
2	Bolt 1 1/2” x 3/8”	MST-IOB-130	4
3	Nylon Locknut 3/8”	MST-IOB-140	4
4	U-bolt #05	MST-IOB-500	4
5	Washer	MST-IOB-120	8
6	Hose Kit	MST-HBR-400	2
	Oiteker clamp - 301	MST-IOB-191	4
	Hose barb straight - straight	MST-IOB-198	2
	Hose 3/4” x 24”	MST-IOB-192	2

Item	Description	Code	Qty
7	Hose Boom 15’	MST-IOB-072	2
8	Boom Brace 79”	MST-IOB-170	2
9	Boom Brace Clamp	MST-RHD-120	4
10	Tap Bolt 1-1/2” x 1/4”	MST-IOB-150	4
11	Bolt 3/4” x 1/4”	MST-IOB-131	2
12	1/4” Nylon Lock Nut	MST-IOB-160	14
13	Barb x ¾” Male Fitting	MST-IOB-194	2
14	Tee Barb x Barb x Male	MST-IOB-199	1
15	Hose barb straight - straight	MST-IOB-198	2
16	Oiteker Clamp – 271R	MST-IOB-191	6

50Hz END GUN BOOSTER PUMP
SPARE PART KITS

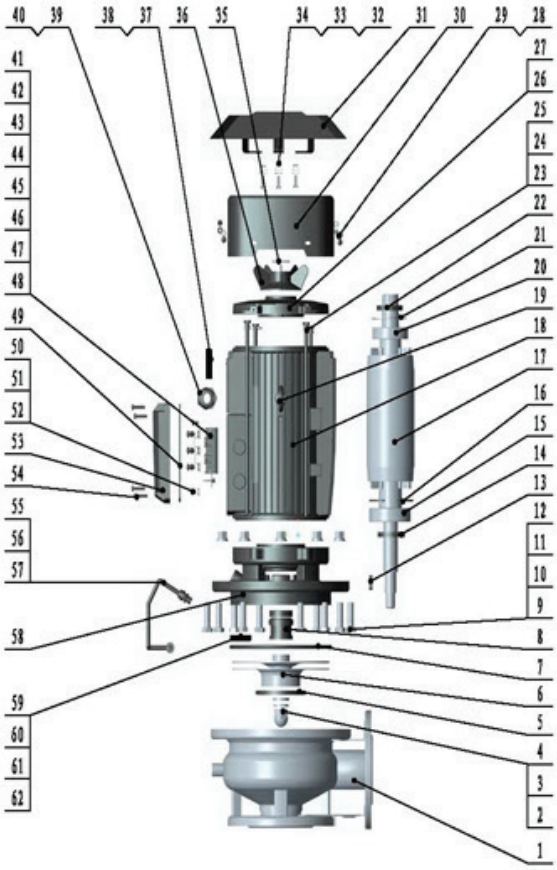

Seal Kit >
Impeller Kit >
Pump Body Volute Kit >
Motor Assembly >
Backplate Kit >
Motor Terminal Cover Kit >
Motor Cowl & Cover Kit >
Seal Flush Tube Kit >
Motor Bearings & Fan Kit >
Motor Stator Kit >
Motor Fan Kit >

#	Description	QTY
1	Pump Body - Volute	1
2	Nut - Impeller	1
3	Spring Washer - Impeller	1
4	Washer - Impeller	1
5	Floating Seal Ring	1
6	Impeller	1
7	O'Ring - Volute/Backplate	1
8	Mechanical Seal	1
9	Spring Washer	10
10	Plain Washer	10
11	Nut	10
12	Bolt	10
13	Flat Key	1
14	Skeleton Oil Seal	1
15	Ball Bearing	1
16	Circlip Retaining Ring	1
17	Rotor	1
18	Stator	1
19	Eye Bolt	2
20	Ball Bearing	1
21	Wave Spring	1

#	Description	QTY
22	Frame Work Seal	1
23	Bolt	4
24	Plain Washer	4
25	Spring Washer	4
26	End Plate	1
27	Body Seal Ring	1
29	Plain Washer	4
28	Screw	4
30	Fan Cover	1
31	Motor Cowl	1
32	Bolt	3
33	Washer	6
34	Nut	3
35	Circlip Retaining Ring	1
36	Fan	1
37	Name Plate	1
38	Rivet	1
39	Cable Connector	1
40	Body Seal Ring	1
41	Number Tube W1	1
42	Number Tube V1	1

#	Description	QTY
43	Number Tube UI	1
44	Number Tube W2	1
45	Number Tube V2	1
46	Number Tube U2	1
47	Terminal Block	1
48	Terminal Screws	6
49	Terminal Cover Seal	1
50	Terminal Block Screw	1
51	Locking Washer Term Block	1
52	Spring Washer Term Block	1
53	Terminal Cover	1
54	Screw Terminal Cover	4
55	Tube Fitting	2
56	Tube Fitting	2
57	Seal Flush Tube	1
58	Backplate - Link Body	1
59	Guide Plate	2
60	Screw Guide Plate	2
61	Spring Washer Guide Plate	2
62	Plain Washer Guide Plate	2

50Hz END GUN BOOSTER PUMP
SPARE PART KITS

Seal Kit

Code	Description	QTY	AUD
HC-EGBP50SK	**Seal Kit**	**1**	**$270.48**
Includes:			
5	Floating Seal Ring	1	
7	O'Ring - Volute/Backplate	1	
8	Mechanical Seal	1	

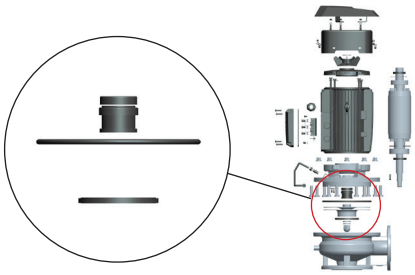

Impeller Kit

Code	Description	QTY	AUD
HC-EGBP5022IK	**Impeller Kit 50Hz for 2.2kW**	**1**	**$265.10**
HC-EGBP5037IK	**Impeller Kit 50Hz for 3.7kW**	**1**	**344.66**
HC-EGBP6022IK	**Impeller Kit 60Hz (125mm)**	**1**	**265.10**
HC-EGBP6037IK	**Impeller Kit 60Hz (140mm)**	**1**	**$344.64**
Includes:			
2	Nut - Impeller	1	
3	Spring Washer - Impeller	1	
4	Washer - Impeller	1	
5	Floating Seal Ring	1	
6	Impeller	1	

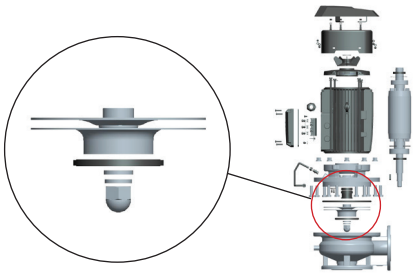

Pump Body Volute Kit

Code	Description	QTY	AUD
HC-EGBP50PBK	**Pump Body Volute Kit**	**1**	**$1,364.22**
Includes:			
1	Pump Body - Volute	1	
9	Spring Washer	10	
10	Plain Washer	10	
11	Nut	10	
12	Bolt	10	

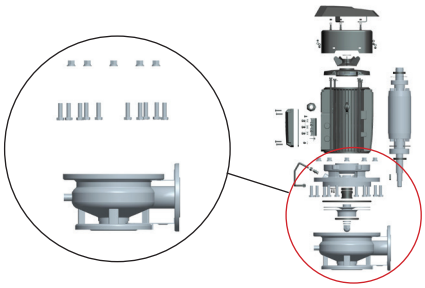

50Hz END GUN BOOSTER PUMP
SPARE PART KITS

Motor Assembly

Code	Description	QTY	AUD
HC-EGBP5022MK	**Motor Assembly for 2.2kW**	**1**	**1,841.69**
HC-EGBP5037MK	**Motor Assembly for 3.7kW**	**1**	**$2,632.77**
Includes:			
13	Flat Key	1	
14	Skeleton Oil Seal	1	
15	Ball Bearing	1	
16	Circlip Retaining Ring	1	
17	Rotor	1	
18	Stator	1	
19	Eye Bolt	2	
20	Ball Bearing	1	
21	Wave Spring	1	
22	Frame Work Seal	1	
23	Bolt	4	
24	Plain Washer	4	
25	Spring Washer	4	
26	End Plate	1	
27	Body Seal Ring	1	
35	Circlip Retaining Ring	1	
36	Fan	1	
39	Cable Connector	1	
40	Body Seal Ring	1	
41	Number Tube W1	1	
42	Number Tube V1	1	
43	Number Tube UI	1	
44	Number Tube W2	1	
45	Number Tube V2	1	
46	Number Tube U2	1	
47	Terminal Block	1	
48	Terminal Screws	6	
50	Terminal Block Screw	1	
51	Locking Washer Term Block	1	
52	Spring Washer Term Block	1	
58	Backplate - Link Body	1	
59	Guide Plate	1	
60	Screw Guide Plate	2	
61	Spring Washer Guide Plate	2	
62	Plain Washer Guide Plate	2	

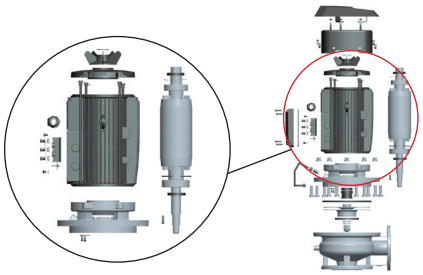

50Hz END GUN BOOSTER PUMP
SPARE PART KITS

Backplate Kit

Code	Description	QTY	AUD
HC-EGBP50BPK	**Backplate Kit**	**1**	**$291.28**
Includes:			
14	Skeleton Oil Seal	1	
35	Circlip Retaining Ring	1	
36	Fan	1	
58	Backplate - Link Body	1	
59	Guide Plate	2	
60	Screw Guide Plate	2	
61	Spring Washer Guide Plate	2	
62	Plain Washer Guide Plate	2	

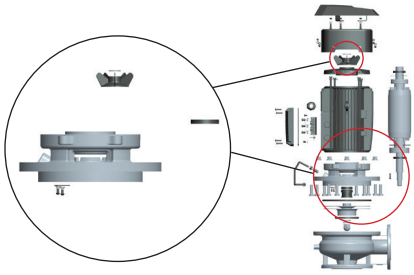

Motor Terminal Cover Kit

Code	Description	QTY	AUD
HC-EGBP50TCK	**Motor Terminal Cover Kit**	**1**	**$35.54**
Includes:			
49	Terminal Cover Seal	1	
53	Terminal Cover	1	
54	Screw Terminal Cover	4	

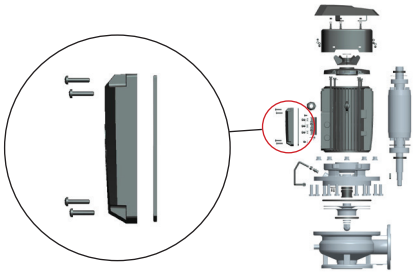

Motor Cowl & Cover Kit

Code	Description	QTY	AUD
HC-EGBP50FCK	**Motor Cowl & Cover Kit**	**1**	**$111.08**
Includes:			
28	Screw	4	
29	Plain Washer	4	
30	Fan Cover	1	
31	Motor Cowl	1	
32	Bolt	3	
33	Washer	6	
34	Nut	3	
35	Circlip Retaining Ring	1	
36	Fan	1	

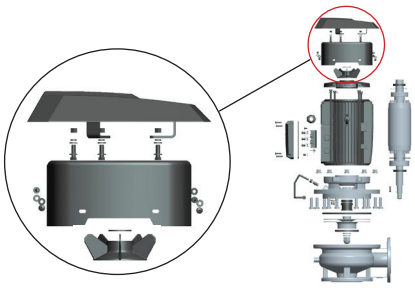

Seal Flush Tube Kit

Code	Description	QTY	AUD
HC-EGBP50FTK	**Seal Flush Tube Kit**	**1**	**$29.05**
Includes:			
55	Tube Fitting	2	
56	Tube Fitting	2	
57	Seal Flush Tube	1	

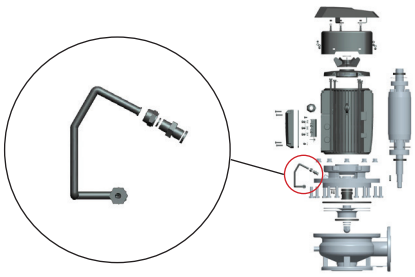

50Hz END GUN BOOSTER PUMP
SPARE PART KITS

Motor Bearings & Fan Kit

Code	Description	QTY	AUD
HC-EGBP50BFK	**Motor Bearing & Fan Kit**	**1**	**$167.25**
Includes:			
14	Skeleton Oil Seal	1	
15	Ball Bearing	1	
16	Circlip Retaining Ring	1	
20	Ball Bearing	1	
21	Wave Spring	1	
22	Frame Work Seal	1	
35	Circlip Retaining Ring	1	
36	Fan	1	

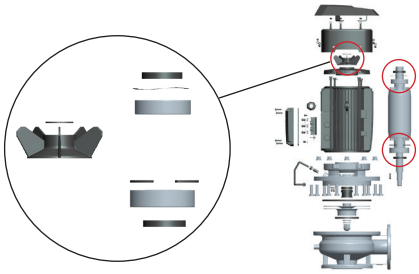

Motor Stator Kit

Code	Description	QTY	AUD
HC-EGBP5022MS	**Motor Stator - 2.2kW Bare**	**1**	**$1,023.10**
HC-EGBP5037MS	**Motor Stator - 3.7kW Bare**	**1**	**1,494.26**
Includes:			
18	Stator	1	
35	Circlip Retaining Ring	1	
36	Fan	1	
41	Number Tube W1	1	
42	Number Tube V1	1	
43	Number Tube UI	1	
44	Number Tube W2	1	
45	Number Tube V2	1	
46	Number Tube U2	1	

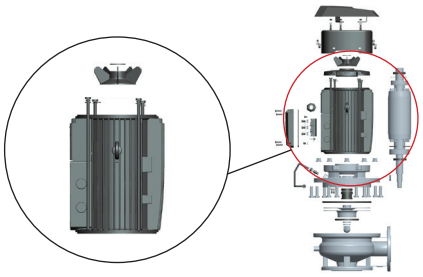

Motor Fan Kit

Code	Description	QTY	AUD
HC-EGBP50FAN	**Fan Kit**	**1**	**$4.02**
Includes:			
35	Circlip Retaining Ring	1	
36	Fan	1	

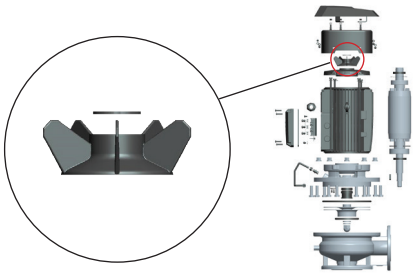

NELSON

Effective July 1, 2026

In these terms and conditions "the Company" means Nelson Irrigation Corporation of Australia Pty Ltd ABN 61 064 013 001 (including its successors and assigns) and "Customer" means the buyer whose order for the purchase of Goods is accepted by the Company. "Goods" means all products and services agreed to be supplied by the Company to the Customer under any contract, arrangement order or understanding between the Company and the Customer, whether by way of sale or hire. Each time the Customer places an order with the Company the Customer accepts these Terms and Conditions as governing the supply of the goods or services ordered. Amendments to or deviations from these Terms and Conditions must be agreed in writing by the Company.

1. ACCEPTANCE OF ORDERS AND CONTRACTS All orders and contracts accepted or entered into by a representative of the Company are subject to, and shall not be binding on the Company until, acceptance and approval by the Company. The Company reserves the right to accept or reject any order in whole or in part for any reason, including without limitation the unavailability of any goods.

2. DELIVERY AND RISK

2.1 The Company's policy is to make every effort to ensure prompt delivery of Goods ordered. The Company makes no warranty as to time of delivery or availability of Goods. In the event of any delay, the Company will affect delivery as soon as practicable.

2.2 The Customer acknowledges that the Company shall be under no liability for either direct or consequential loss or damage to the Customer arising from delay or postponement in delivery.

2.3 Unless otherwise agreed in writing all risk in and to the Goods purchased shall pass to the Customer upon delivery to the Customer or its agent or to a carrier commissioned by the Customer and any claims for damages or loss onwards cannot be accepted by the Company.

2.4 No claims for damage in transit, shortage of delivery, or loss of goods will be entertained unless, in the case of damage in transit or shortage of delivery, a separate notice in writing is given to the Company and to the carrier concerned (if any) within seven days of the receipt of goods and, in the case of loss of goods, notice in writing is given to the Company and the carrier concerned (if any) within seven days of the date of the invoice.

2.5 If the Company short supplies any Goods, it will rectify this by supplying the missing items.

3. GOODS RETURNED FOR CREDIT Goods, as listed in our published Price List may be credited if returned to the Company within 30 days of delivery, free into our store in original packing, in an unsoiled, undamaged and reusable condition. Returns are to be accompanied by a Delivery Docket stating original invoice number, date of purchase and reason for return. A 20% restocking fee will be charged on all Goods returned for credit. No Goods will be accepted for credit after 30 days unless prior arrangement has been made. Goods not listed in our published Price List or which are made to special order are not returnable for Credit.

4. WARRANTIES, LIABILITY AND DISCLAIMER

4.1 The Company warrants that its products will be free from original defects in material and workmanship for a period of one year from the original sale when used within the working specifications for which the product was designed and under normal use and service. Goods sold shall have the benefit of any warranty given by the Manufacturer. The Manufacturer and the Company assume no responsibility for defect, damage or loss caused by or during installation or removal, or the unauthorised repair, of the Goods.

4.2 The Company's liability for breach of the terms of this contract, breach of warranty, or breach of a Condition or Warranty implied by the Competition and Consumer Act 2010 (Cth) or otherwise implied into these terms by law shall hereby be limited to one or more of the following remedies, the choice of which is solely at the discretion of the Company: the replacement of the Goods OR the supply of equivalent goods OR repair of the Goods OR payment of the cost of repairing the Goods OR of the cost of replacing the goods or of acquiring equivalent Goods.

4.3 The Company shall under no circumstance be liable in any way whatsoever to the Customer or any other party for any crop losses or other consequential or indirect losses or damage of any kind arising directly or indirectly out of the supply, performance or use of the Goods or out of any breach of contract, negligence or other tort.

4.4 To the extent permitted by law, the warranties and remedies contained in this clause 4 exclude and replace all other warranties and remedies, express or implied, whether arising from the Sale Of Goods Act (Qld) 1896, the Competition And Consumer Act 2010 or otherwise, including warranties of merchantability, fitness for particular purposes and all other obligations or liabilities of the Company Or Manufacturer.

4.5 No agent, employee or representative of the Company has authority to waive, alter or add to the provisions of this warranty, nor to make any representations or warranty not contained herein.

4.6 The Purchaser represents to the Company that if a water supply is involved, unless otherwise specified, the water is clean and free of impurities AND that Goods are required for the Customer's Specifications detailed to the Company and for no other purpose, and agrees to indemnify the Company against all loss and expense suffered and incurred by the Company arising out of the falsity or breach of the said Representations.

5. ADVICE

5.1 Any advice, recommendation, information, assistance or service by the Company in relation to the supply of Goods or use thereof is given in good faith and is believed to be appropriate and reliable. The Customer warrants and agrees that it will not rely on any such advice, recommendation, information, assistance or service, but enters into this agreement and acquires the Goods in reliance on its own judgment and with full opportunity to gain independent advice as to the nature and quality of the Goods and their suitability for the Customer's needs and specifications.

5.2 Any liability arising out of or in respect of such advice, recommendation, information or service provided by the Company is hereby excluded.

6. FORCE MAJEURE The Company shall not be liable for failure or delay to supply the goods due to a cause beyond its control including but not limited to acts of God, strikes, lock outs or other industrial disturbances, fire, flood, explosion, riot, government interference and the like.

7. RETENTION OF TITLE

7.1 As long as the Customer owes the Company any part of the price of Goods supplied at any time, the Company shall retain the legal title to all Goods supplied and not yet used or resold in the ordinary course of business.

7.2 When such Goods are used, even with the loss of identity, the legal title to the resultant product ("Resultant Products") shall vest in the Company.

7.3 Where the Company retains title, any Proceeds of sale of such Goods or Resultant Products must be received and kept by the Customer as trustee for the Company, be banked into a separate account, and be accounted for to the Company on demand.

7.4 While such Goods or Resultant Products are in the possession of the Customer, the Customer must retain them in a good and merchantable condition and ensure that they are stored separately and marked as the property of the Company until paid for in full or collected by the Company, and must allow the Company and/or its servants or agents onto the premises where they are stored for the purpose of ensuring compliance with these terms or collecting the Goods.

8. PAYMENT AND DEFAULT

8.1 Payment in full for Goods supplied shall be made by the Customer to the Company within 28 days from end of the month in which the Goods are despatched, or as specified by the Company. Settlement discount where applicable will be disallowed if payment is not made in full by the due date.

8.2 In the event that payment to the Company becomes overdue, the Company may suspend the supply of Goods until the account is brought up to date, elect take immediate possession of Goods not paid for and /or choose to terminate the contract, without prejudice to any other rights the Company may have and without the Company being liable in any way to any person.

8.3 Without in any way limiting the Company's right to require payment in full on the due date, the Company may at its sole discretion charge interest on overdue accounts at a rate that is 2% above the Company's prevailing bank overdraft rate, accruing from day to day, from the due date of the relevant invoice up to and including the day the relevant invoice was paid in full.

8.4 The Customer shall pay all costs and expenses (including legal costs on an indemnity basis) incurred by the Company and/or its agents in relation to the recovery of any overdue account. The Customer further acknowledges that those expenses may be calculated on a commission basis at a percentage rate of up to 22% of the amount owing and expressly agrees to pay those expenses. Amounts received by the Company may be applied first against the costs of debt recovery and interest charges, and then to the overdue account.

9. SECURITY INTERESTS AND PERSONAL PROPERTY SECURITIES ACT 2009 (PPSA)

9.1 Terms that are defined in the PPSA have the same meaning in this agreement as in the PPSA.

9.2 The Company's Security Interests under this agreement are continuing interests irrespective of whether there are monies or obligations owing by the Customer at any particular time, and may be registered by the Company under the PPSA.

9.3 The Customer acknowledges that, where any part of the purchase price for Goods remains outstanding, or where amounts are outstanding under a contract for the hire of Goods (where the hire is a PPS lease or constitutes a Security Interest), the Company shall have registrable Security Interests in:

a) Goods to which the Company retains title, including hired Goods;

b) Resultant Products to which the Company acquires title;

c) The proceeds of any Goods to which a Security Interest attaches under this agreement.

9.4 Where permitted by the PPSA, the Customer:

a) waives any rights to receive the notifications, verifications, disclosures or other documentation referred to in the PPSA;

b) contracts out of sections 95, 96, 121(4), 125, 129, 130(to the extent possible), 132(3)(d) and (4), 135, 142 and 143 of the PPSA, and nothing in those sections will apply to the sale of Goods under these Terms;

9.5 Where the Company has rights in addition to those contained in the PPSA, those rights continue to apply.

9.6 The Customer must immediately upon the Company's request, do all things and execute all documents necessary to give effect to and preserve the priority of the security interests created under these Terms or arising under the PPSA.

9.7 The Company may allocate amounts received from the Customer in any manner the Company determines, including in any manner required to preserve any Security Interest.

10. PRIVACY AUTHORITY Where Services are supplied to the Customer on credit the Customer irrevocably authorises the Company, its employees and agents to make such enquiries as it deems necessary to investigate the credit worthiness of the Customer from time to time including (but without limiting the generality of the foregoing) the making of enquiries of persons nominated as trade referees, the bankers of the Customer or any other credit providers (the information sources) and the Customer hereby authorises the information sources to disclose to the Company such information concerning the Customer which is within their possession and which is requested by the Company.

11. SEVERABILITY If any provision of part thereof is invalid, illegal or incapable of enforcement, then it shall be severed from the remainder of this Agreement, which shall remain in full force and effect unless the basic purpose of this Agreement would thereby be defeated.

12. GOVERNING LAW Agreements between the parties shall be deemed to be made in Queensland and shall be governed by the law of Queensland.